Rotary Damper (Manual Type)

Features

-Butterfly valve for air volume control (complete sealing is not available.)

Basic specifications

- Valve Type	:	Rotary Damper
- Size	:	40 mm - 600 mm (1 1/2 inch - 24 inch)
- Body Material	:	U-PVC (Conforming to ASTM D1784 Cell Classification 12454A)
	:	PP (Conforming to ASTM D4101 Cell Classification PP0210B67272)
	:	PVDF (Conforming to ASTM D3222 Cell Classification Type II)
- Seal Material / O-ring	:	EPDM, FKM, etc.
- Connection / Wafer	:	JIS B2220 10K, JIS B2220 5K, DIN/EN1092-1, ANSI B16.5

	FLUID TEMPERATURE ˚C {˚F}	MAXIMUM WORKING PRESSURE (NORMAL TEMPERATURE) MPa {psi}	
		40mm - 200mm	250mm - 600mm
U-PVC	0 ~ 50 { 30~120 }	0.1 { 15 }	0.05 { 7 }
PP	-20 ~ 80 { -5~175 }	0.1 { 15 }	0.05 { 7 }
PVDF	-20 ~ 120 { -5~250 }	0.1 { 15 }	0.05 { 7 }

Note: The maximum working pressure is the value including the water hammer pressure.
Be careful that the maximum working pressure is not exceeded during use.

* Concerning the allowable pressure for each temperature and material, see the technical documents at the next page of this sheet.

Certificate / Approval

PED

"For details of applicable products, please consult us."

Working pressure vs. Temperature

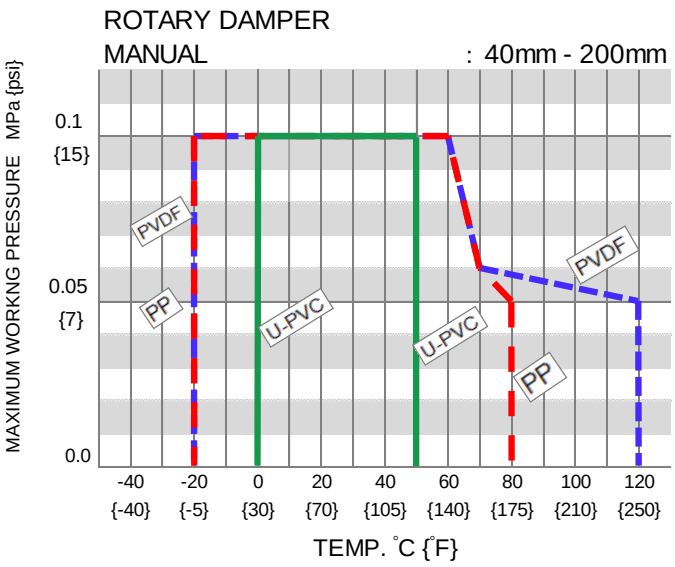

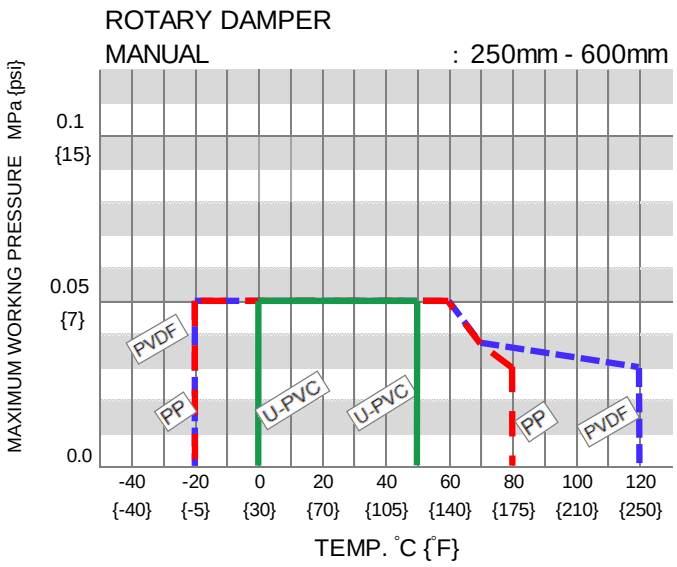

Note: Make sure that the temperature and pressure are within the working range during operation.
(If the tolerance range is exceeded during use, the valve may be damaged.)

Product dimension

40mm (1 1/2") - 200mm (8")

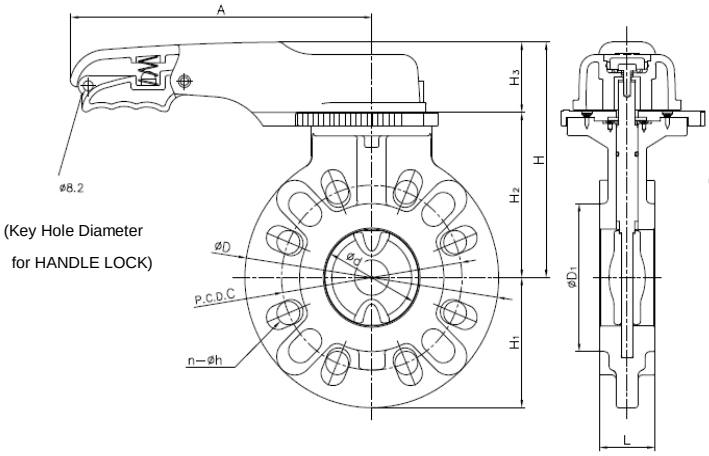

250mm (10") - 350mm (14")

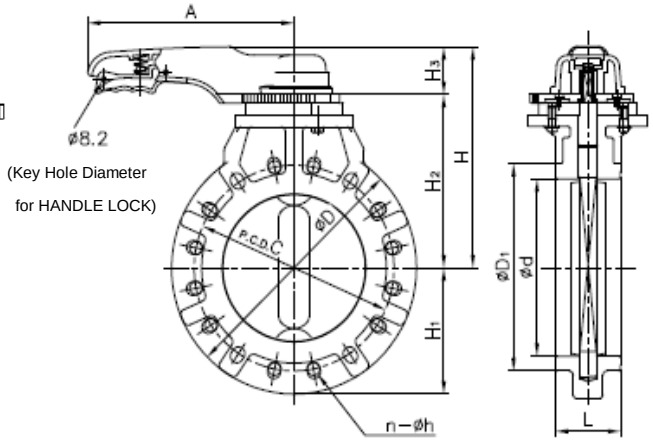

400mm (16")

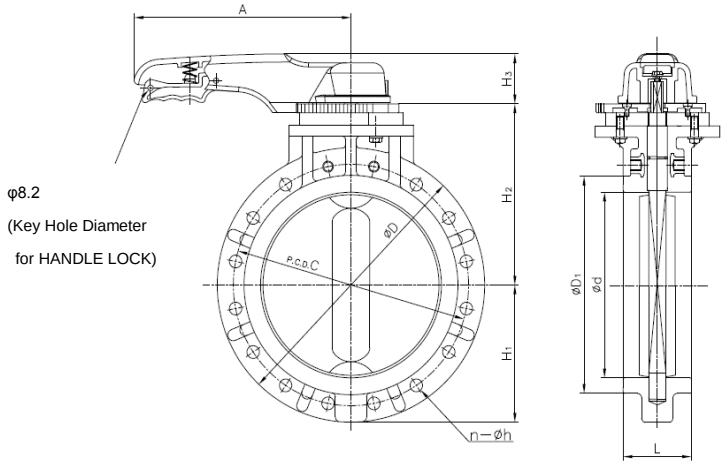

Detail of inserted nuts

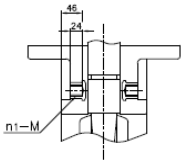

JIS 10K only

PP 450mm (18") - 600mm (24")

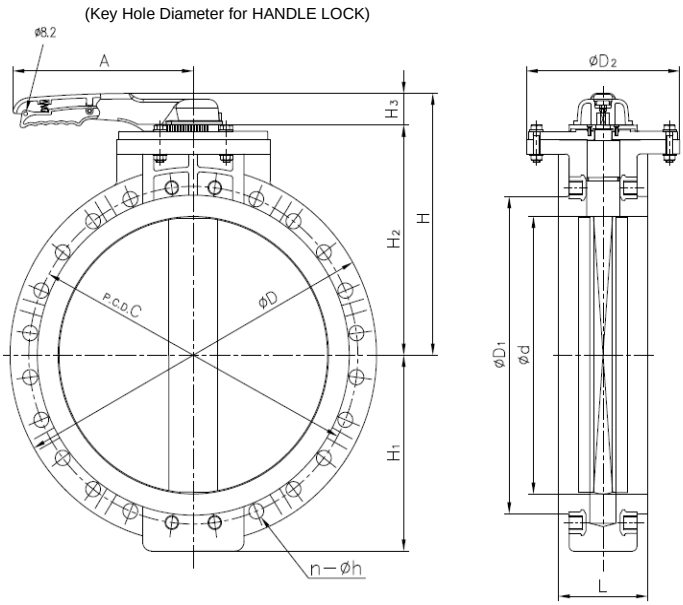

Detail of inserted nuts

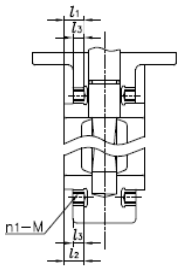

JIS 10K only

PVDF

450mm (18") - 600mm (24")

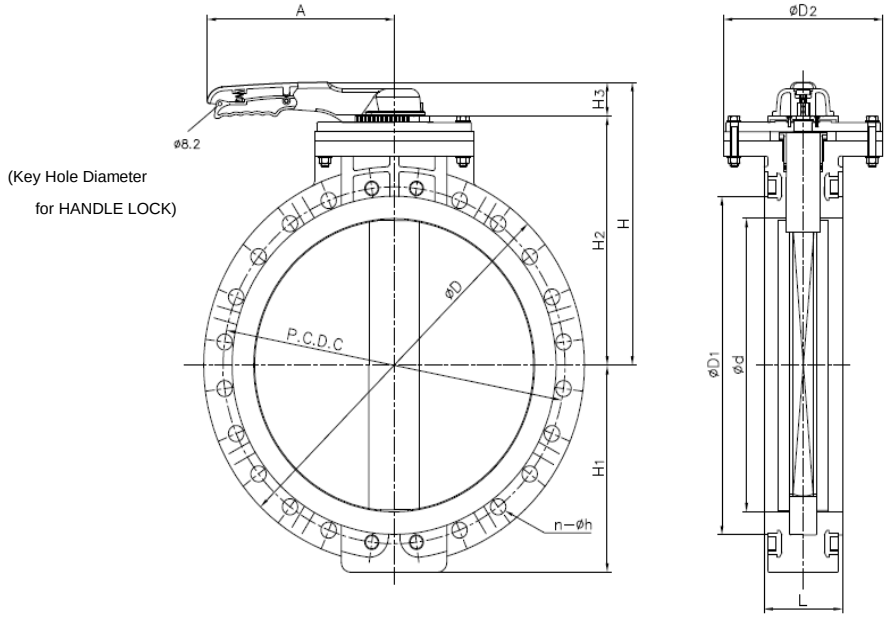

Detail of inserted nuts

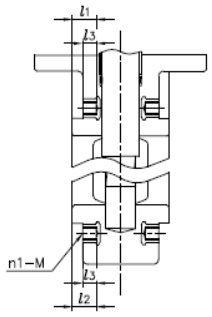

JIS 10K only

■40 - 600mm JIS, DIN (Unit: mm)

mm	inch	d	D	D_1	D_2	L	H	H_1	H_2	H_3	A	JIS 5K C	JIS 5K n	JIS 5K h	JIS 10K C	JIS 10K n	JIS 10K h	JIS 10K n1	JIS 10K M	DIN PN10 C	DIN PN10 n	DIN PN10 h
40	1 1/2	46	150	86	—	32	156	75	100	56	220	95	4	15	105	4	19	-	-	110	4	18
50	2	57	165	96	—	35	166	83	110	56	220	105	4	15	120	4	19	-	-	125	4	18
65	2 1/2	70	185	116	—	37	176	93	120	56	220	130	4	15	140	4	19	-	-	145	4	18
80	3	78	211	120	—	37	191	106	135	56	250	145	4	19	150	8	19	-	-	160	8	18
100	4	103	238	152	—	47	206	119	150	56	250	165	8	19	175	8	19	-	-	180	8	18
125	5	128	263	190	—	57	237	132	168	69	320	200	8	19	210	8	23	-	-	210	8	18
150	6	150	285	208	—	62	252	143	183	69	320	230	8	19	240	8	23	-	-	240	8	22
200	8	195	340	264	—	76	283	170	214	69	400	280	8	23	290	12	23	-	-	295	8	22
250	10	251	421	332	—	96	342	211	273	69	400	345	12	23	355	12	25	-	-	350	12	22
300	12	303	488	400	—	116	399	244	330	69	400	390	12	23	400	16	25	-	-	400	12	22
350	14	352	539	414	—	116	426	270	357	69	400	435	12	25	445	16	25	-	-	460	16	22
400	16	394	600	470	—	157	451	300	382	69	400	495	16	25	510	14	27	2	M24	515	16	26
450	18	441	630	525	340	167	496	315	402	69	400	555	16	25	565	16	27	4	M24	565	20	26
500	20	488	699	575	340	177	526	350	432	69	400	605	20	25	620	16	27	4	M24	620	20	26
600	24	600	813	686	340	197	591	424	497	69	400	715	20	27	730	20	33	4	M30	725	20	30

■450 - 600mm JIS, DIN (Unit: mm)

mm	inch	d	D	D_1	D_2	L	H	H_1	H_2	H_3	A	JIS 5K C	JIS 5K n	JIS 5K h	JIS 10K C	JIS 10K n	JIS 10K h	JIS 10K n1	JIS 10K M	DIN PN10 C	DIN PN10 n	DIN PN10 h
450	18	441	630	525	340	167	491	315	422	69	400	555	16	25	565	16	27	4	M24	565	20	26
500	20	488	680	575	340	177	521	350	452	69	400	605	20	25	620	16	27	4	M24	620	20	26
600	24	600	790	686	340	197	586	424	517	69	400	715	20	27	730	20	33	4	M30	725	20	30

(Detail of inserted nuts)

BODY: PP (Unit: mm)

mm	inch	l_1	l_2	l_3
450	18	43	48	24
500	20	43	53	24
600	24	58	58	30

BODY: PVDF (Unit: mm)

mm	inch	l_1	l_2	l_3
450	18	49	54	24
500	20	49	59	24
600	24	64	64	30

The shape and appearance of assembly differ a little with nominal size compared to this drawing.

Parts list

40mm (1 1/2") - 200mm (8")

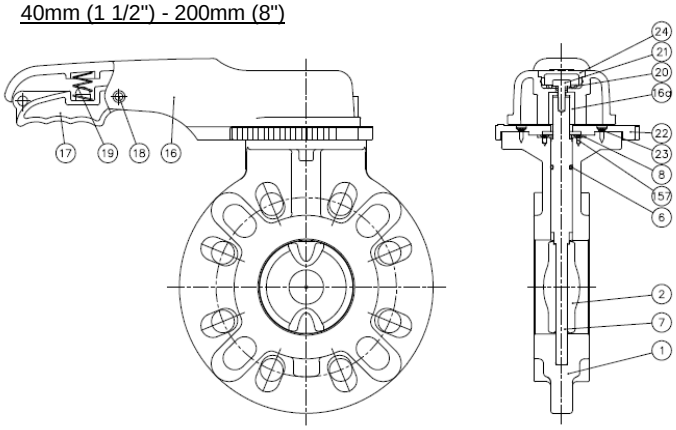

250mm (10") - 350mm (14")

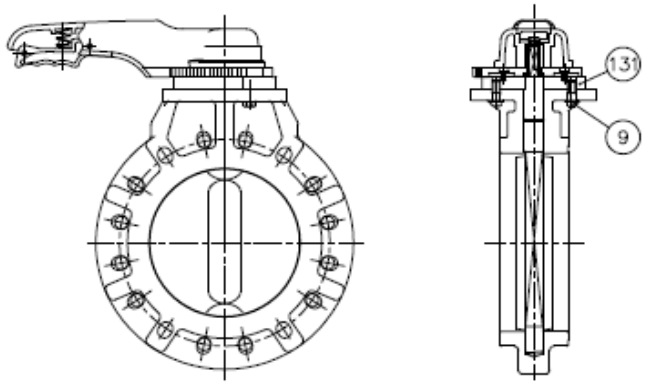

400mm (1 6")

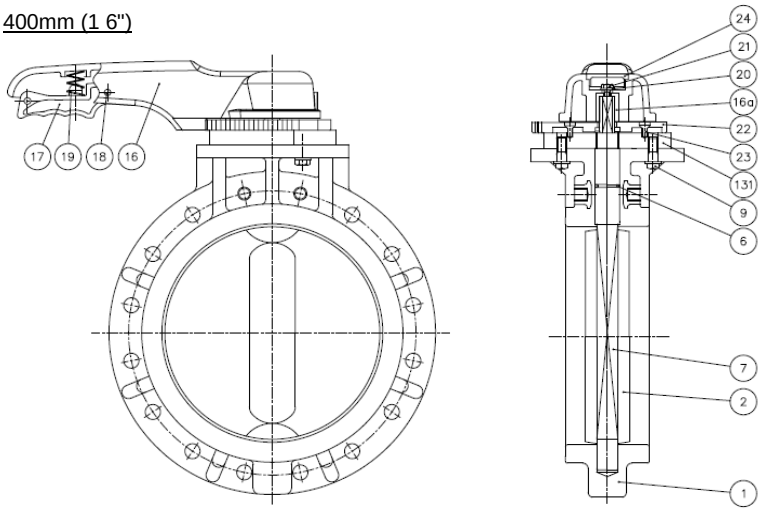

Detail of inserted nuts

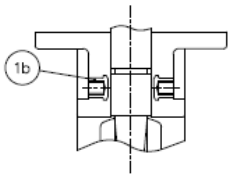

JIS 10K only

PP 450mm (18") - 600mm (24")

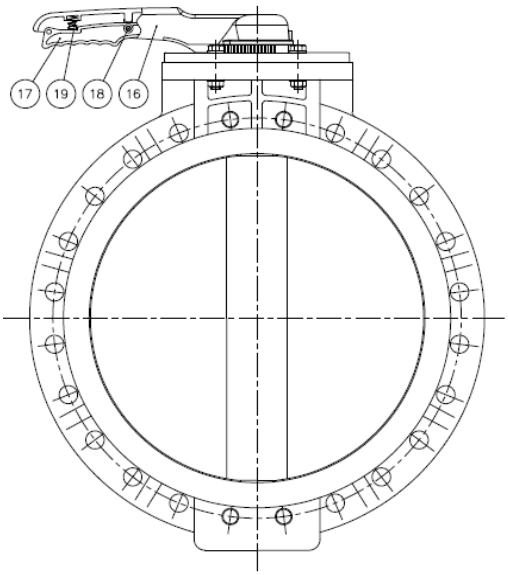

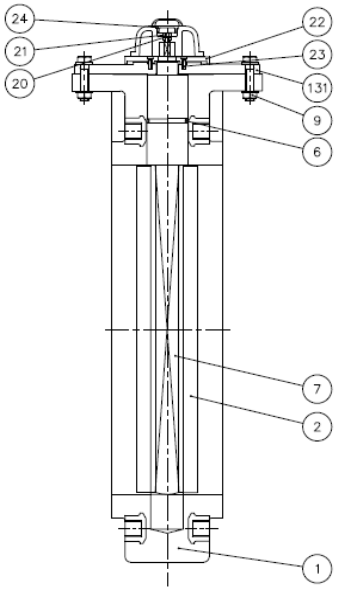

Detail of inserted nuts

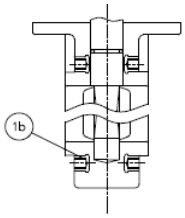

JIS 10K only

PVDF 450mm (18") - 600mm (24")

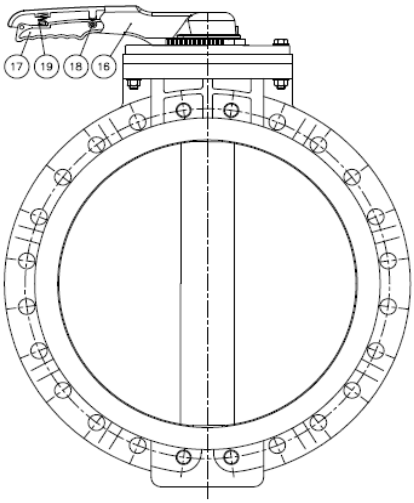

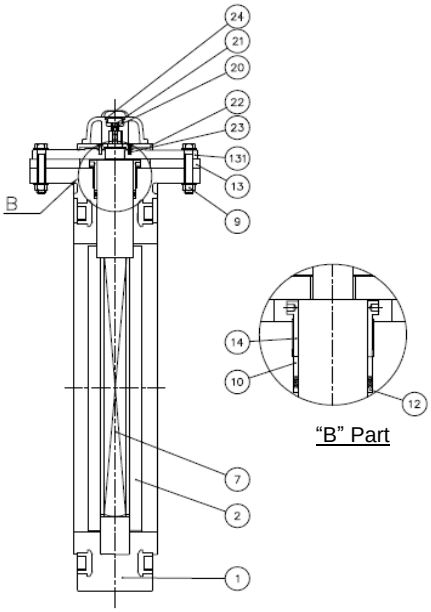

"B" Part

Detail of inserted nuts

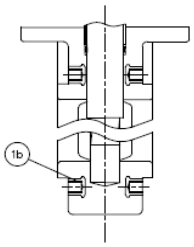

JIS 10K only

■40 - 350mm JIS, DIN, ANSI

PART NO.	NAME	QTY	MATERIAL
1	BODY	1	BODY / STEM PVC / PVC PP / PP
7	STEM	1	
2	DISC	1	PP
6	O-RING (C)	1	EPDM, FKM, Others
8	STEM HOLDER (A)	1	PP
16	HANDLE (A)	1	PP
16a	HANDLE INSERTED METAL	1	STAINLESS STEEL

PART NO.	NAME	QTY	MATERIAL
17	HANDLE LEVER	1	PPG
18	PIN	1	PPG
19	SPRING	1	STAINLESS STEEL
20	WASHER (A)	1	STAINLESS STEEL
21	BLOT (B)	1	STAINLESS STEEL
22	LOCKING PLATE	1	PPG
23	SCREW (B)	4	STAINLESS STEEL

PART NO.	NAME	QTY	MATERIAL
24	CAP (A)	1	PP
157	SCREW (F)	4	STAINLESS STEEL Used for Size 40-200mm
9	BOLT (A)	3	STAINLESS STEEL Used for Size 250-350mm
131	STEM HOLDER (C)	1	PP Used for Size 250-350mm

■400 - 600mm JIS, DIN, ANSI

	PART NO./NAME	QTY	MATERIAL
1	BODY	1	PP, PVDF
2	DISC	1	PP, PVDF
7	STEM	1	PP, PVDF
9	BOLT&NUT(A)	3Set	STAINLESS STEEL
16	HANDLE (A)	1	PP
17	HANDLE LEVER	1	PPG
18	PIN	1	PPG
19	SPRING	1	STAINLESS STEEL
20	WASHER (A)	1	STAINLESS STEEL

	PART NO./NAME	QTY	MATERIAL
21	BOLT (B)	1	STAINLESS STEEL
22	LOCKING PLATE	1	PPG
23	SCREW (B)	4	STAINLESS STEEL
24	CAP (A)	1	PP
131	STEM HOLDER (C)	1	PP
6	O-RING (C)	1	EPDM, FKM, Others Used for PP Body
10	BUSH (A)	1	PVDF Used for PVDF Body

	PART NO./NAME	QTY	MATERIAL
12	V-PACKING	1Set	PTFE Used for PVDF Body
13	SPACER (A)	1Set	C-PVC Used for PVDF Body
14	GLAND	1	PVDF Used for PVDF Body
1b	INSERTED METAL OF BODY	8	COPPER ALLOY Used for JIS 10K

Cv value for each opening degree

40mm (1 1/2") - 350mm (14")

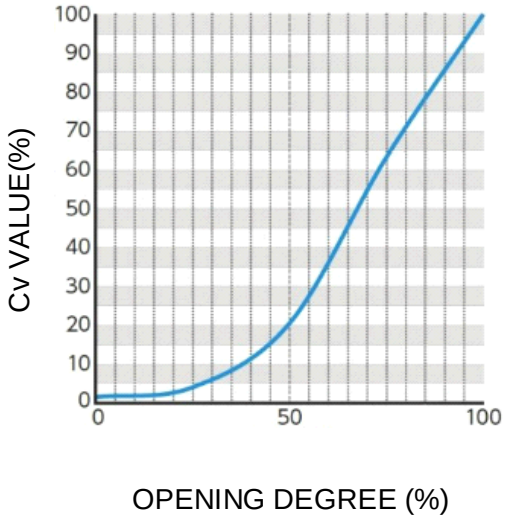

400mm (16") - 600mm (24")

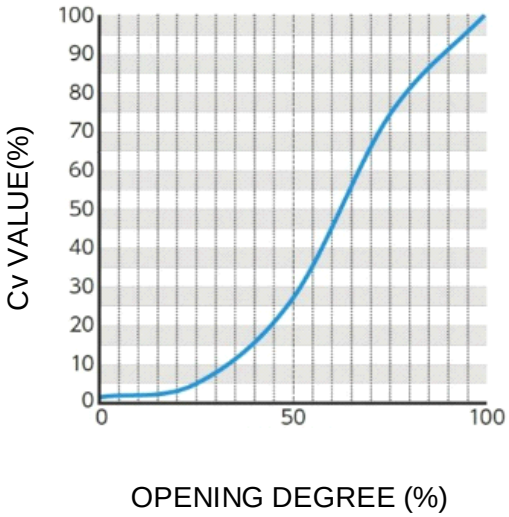

mm	40	50	65	80	100	125	150	200	250	300	350	400	450	500	600
inch	1 1/2	2	2 1/2	3	4	5	6	8	10	12	14	16	18	20	24
ROTARY DAMPER	71	120	250	300	470	830	1,100	2,500	3,860	5,700	6,440	8,340	10,890	14,060	18,500

Operating torque

UNIT : N · m

mm	40	50	65	80	100	125	150	200	250	300	350	400	450	500	600
inch	1 1/2	2	2 1/2	3	4	5	6	8	10	12	14	16	18	20	24
Operation torque (O→S)	5	10	15	20	30	40	65	165	300	330	400	760	820	1,150	1,600

Dimension of bolt length（reference：recommended data）

BOLT A

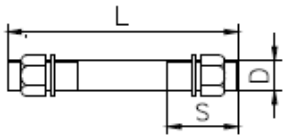

BOLT B

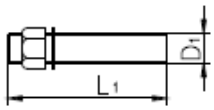

■ JIS 10K

UNIT : mm

mm	inch	BOLT A			BOLT B				QTY		
		d	L	S	d_1	L_1	S_1	S_2	BOLT A	BOLT B	NUT / WASHER
40	1 1/2	M16	115	45	—	—	—	—	4	—	8
50	2		125								
65	2 1/2		135								
80	3		135						8		16
100	4		145								
125	5	M20	165	55							
150	6		175								
200	8		195						12		24
250	10	M22	225	60							
300	12		245						16		32
350	14		255	65							
400	16	M24	290	60	M24	115	60	30	14	4	32
450	18		305	65		120	65		16	8	40
500	20		315								
600	24	M30	350	75	M30	135	70	40	20		48

■ JIS 5K

UNIT : mm

mm	inch	BOLT A			BOLT B				QTY		
		d	L	S	d_1	L_1	S_1	S_2	BOLT A	BOLT B	NUT / WASHER
40	1 1/2	M12	100	35	—	—	—	—	4	—	8
50	2		105								
65	2 1/2		110								
80	3	M16	120	40					8	—	16
100	4		130								
125	5		140								
150	6		150								
200	8	M20	195	55							
250	10		225	60					12	—	24
300	12		240								
350	14		255	65							
400	16	M22	260	55					16	—	32
450	18		270								
500	20		280						20	—	40
600	24	M24	315	60							

In the above list, the values for size 40 to 350 mm indicate the bolt dimensions when an AVTS flange is used.
The values for size 400 to 600 mm indicate the bolt dimensions when a JIS B2238 "steel pipe flange" (nominal pressure 10K, corrugated) is used.
The quantity of nuts and washers for Bolt A indicates the number of 2 sets (1 bolt / 2 nuts, 2 washers).
The quantity for Bolt B indicate the number of 1 set (1 bolt / 1 nut, 1 washer).

Product weight list (reference)

ROTARY DAMPER (LEVER TYPE) UNIT: kg

mm	inch	ROTARY DAMPER		
		U-PVC	PP	PVDF
40	1 1/2	1.1	0.9	1.4
50	2	1.3	1.0	1.7
65	2 1/2	1.5	1.2	2.0
80	3	1.7	1.3	2.3
100	4	2.3	1.7	3.1
125	5	4.4	3.5	5.3
150	6	5.3	4.2	6.6
200	8	8.4	6.6	10.1
250	10	11.2	8.0	22.5
300	12	17.0	15.0	32.7
350	14	19.0	16.0	35.2
400	16	–	22.0	48.5
450	18	–	28.0	50.0
500	20	–	36.0	57.5
600	24	–	66.0	79.0

Product model code list

ACTUATION	TYPE	OPERATING SYSTEM	BODY MATERIAL	SEAL MATERIAL	CONNECTION	STANDARD	SIZE
V	* *	LV	*	*	W	*	* * *
:	:	:	:	:	:	:	:
V MANUAL VALVE	D7 TYPE 57 D6 TYPE 56 DP TYPE 75	LV LEVER TYPE	U U-PVC P PP F PVDF	E EPDM V FKM	W WAFER	1 JIS 10K 5 JIS 5K D DIN A ANSI	040 40mm : 600 600mm

Installation, Operation and Maintenance Manual

"For details of Installation, Operation and Maintenance, please contact our nearest distribution agent or sales office.